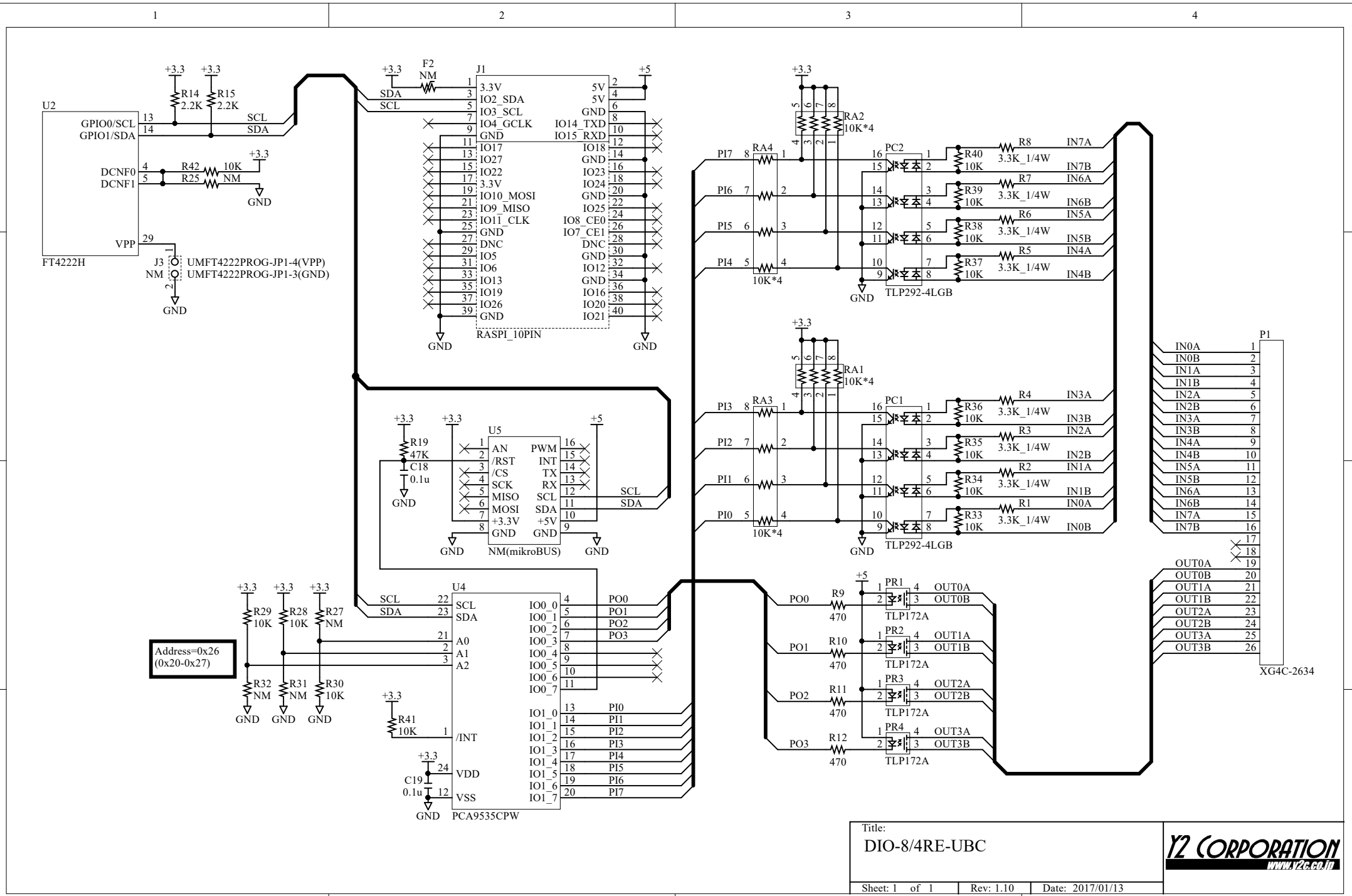
U2
FT4222H
GPIO0/SCL
GPIO1/SDA
DCNF0
DCNF1
VPP
R14 2.2K
R15 2.2K
R42 10K
R25 NM
J3 NM
UMFT4222PROG-JP1-4(VPP)
UMFT4222PROG-JP1-3(GND)
F2 NM
J1
RASPI_10PIN
3.3V
IO2_SDA
IO3_SCL
IO4_GCLK
GND
IO17
IO27
IO22
IO10_MOSI
IO9_MISO
IO11_CLK
DNC
IO5
IO6
IO13
IO19
IO26
5V
IO14_TXD
IO15_RXD
IO18
IO23
IO24
IO25
IO8_CE0
IO7_CE1
IO12
IO16
IO20
IO21
U5
NM(mikroBUS)
AN
/RST
/CS
SCK
MISO
MOSI
+3.3V
PWM
INT
TX
RX
+5V
R19 47K
C18 0.1u
U4
PCA9535CPW
SCL
SDA
A0
A1
A2
/INT
VDD
VSS
IO0_0
IO0_1
IO0_2
IO0_3
IO0_4
IO0_5
IO0_6
IO0_7
IO1_0
IO1_1
IO1_2
IO1_3
IO1_4
IO1_5
IO1_6
IO1_7
PO0
PO1
PO2
PO3
PI0
PI1
PI2
PI3
PI4
PI5
PI6
PI7
R29 10K
R28 10K
R27 NM
R32 NM
R31 NM
R30 10K
R41 10K
C19 0.1u
Address=0x26
(0x20-0x27)
RA2 10K*4
RA4 10K*4
RA1 10K*4
RA3 10K*4
PC2
PC1
TLP292-4LGB
R40 10K
R39 10K
R38 10K
R37 10K
R36 10K
R35 10K
R34 10K
R33 10K
R8 3.3K_1/4W
R7 3.3K_1/4W
R6 3.3K_1/4W
R5 3.3K_1/4W
R4 3.3K_1/4W
R3 3.3K_1/4W
R2 3.3K_1/4W
R1 3.3K_1/4W
IN7A
IN7B
IN6A
IN6B
IN5A
IN5B
IN4A
IN4B
IN3A
IN3B
IN2A
IN2B
IN1A
IN1B
IN0A
IN0B
P1
XG4C-2634
R9 470
R10 470
R11 470
R12 470
PR1
PR2
PR3
PR4
TLP172A
OUT0A
OUT0B
OUT1A
OUT1B
OUT2A
OUT3A
OUT3B
GND
+3.3
+5
Title:
DIO-8/4RE-UBC
Sheet: 1 of 1
Rev: 1.10
Date: 2017/01/13
Y2 CORPORATION
www.y2c.co.jp